Ratings
Voltage: 300 V
Temperature: -40~80 °C
Flammability: FT2

Conductor
Conductor count: 9
Gauge: 20 AWG 0.52 mm²
Material: bare copper
Strand size: ∅0.127x41 mm
Resistance at 20 °C: 34.6 Ω /km max

Insulator
Material: TPE 85A
Color: red, black, white, yellow, blue, green, orange, purple, gray
Diameter: ∅1.5 ±0.10 mm
Nominal thickness: 0.27mm
Resistance at 20 °C: 100 MΩ /km min

Filler
Material: cotton rope

Wrap
Material: cotton paper

Outer jacket
Material: TPU (Polyether Polyurethane) 80A
Color: black
Diameter: ∅7.3 ±0.25 mm
Nominal thickness: 0.76mm

Wire marking
E339579 UL AWM STYLE 20280 20 AWG 80°C 300V - - - cUL AWM I/II A 80°C 300V FT2 TENSILITY

Tests
Spark test: 3.0 kV
Insulation tensile strength: 0.562 kgf/mm2
Jacket tensile strength: 1.05 kgf/mm2
After aging at 113 ±2 °C for 7 days:
- Minimum jacket tensile strength 70 % original
- Minimum insulation tensile strength 75 % original
- Minimum jacket elongation 65 % original
- Minimum insulation elongation 75 % original

Heat shock: 121 ±1 °C /1 hour, no observed degradation
Deformation: 121 ±1 °C /1 hour, ≤ 50 %
Cold bend: -10 ±2 °C /1 hour, no observed cracking
Dielectric test: 2000 Vac for 1 minute without breakdown

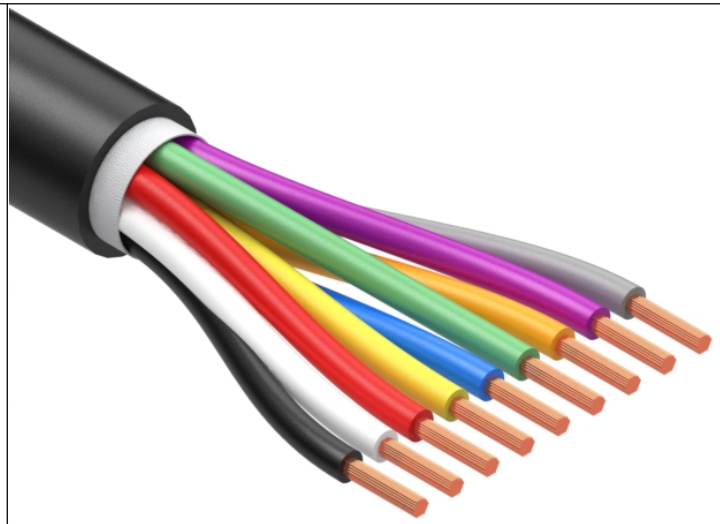

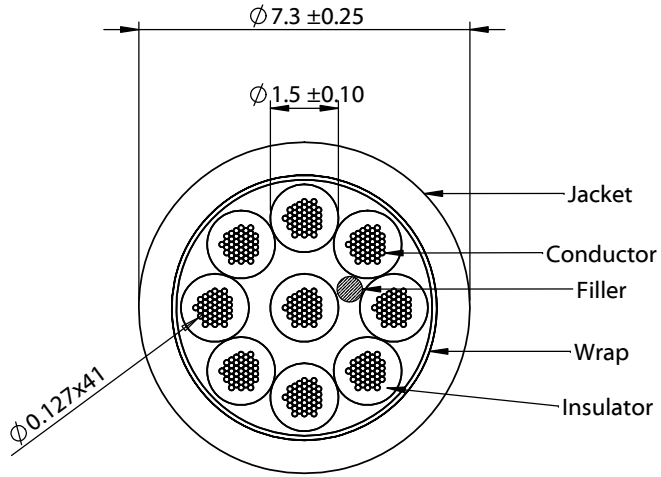

Revision:	Date:	Description:
A	10/25/22	Initial release

Prepared: MP Digitally signed by MP Date: 2023.02.22 13:47:49 -08'00'

Verified: JD Digitally signed by JD Date: 2023.02.22 14:48:27 -08'00'

Dimensions are in millimeters.
Tolerances:
X: ± 0.5 mm
X.X: ± 0.3 mm
X.XX: ± 0.05 mm

Notes:
RoHS compliant

Phthalate and halogen free

Function test: no open, no short circuit, no intermittent

Description:
Wire, 9C BC, 20 AWG, UL20280, 300V, 80C, 7.3 mm, FT2, TPU

TENSILITY
tel 1.541.323.3228 800 877.670.7118
fax 1.541.323.4202 web tensility.com

Size: A
Part number: 30-02392
Scale: 6:1
Sheet 1 of 1

To see a custom version of this cable assembly, call Tensility at 541-323-3228 or email engineering@tensility.com

5 4 3 2 1